Graphs and Transformations – Test 3b – Answers
OCR – 2004 – C1

1. a)

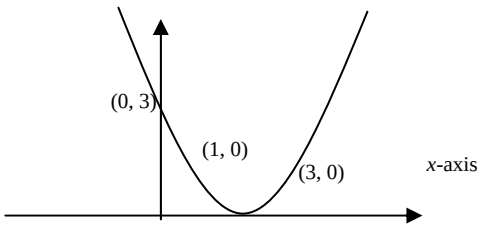

correct values for crossing axes **A1A1A1**
U-shaped parabola **A1**

A1 **A1**

b) $y = (x - 1)(x - 3) = x^2 - 4x + 3 = (x - 2)^2 - 1$

c) Minimum when $(x - 2)^2 - 1$ is the smallest possible value
i.e. when $(x - 2)^2$ is smallest
$x = 2$, $y = -1$ **A1A1** **8**

2. a) Asmptopes: x and y-axis **A1** correct two halves **A1A1**

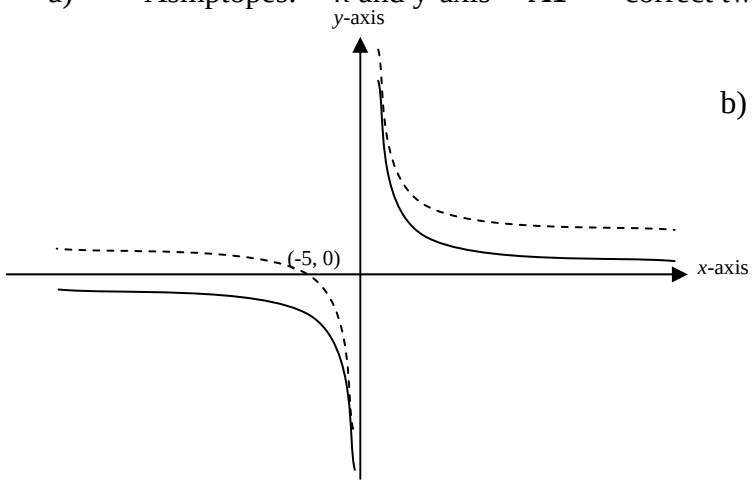

b) Correct shift 1 up. **A1 ft**
Crosses x-axis at –5 **A1**
Asmptopes: y-axis ($x = 0$) & $y = 1$
A1 **A1**

7

3) a) $y = x^3 + k$, k a positive constant. **A1** for correct sketch

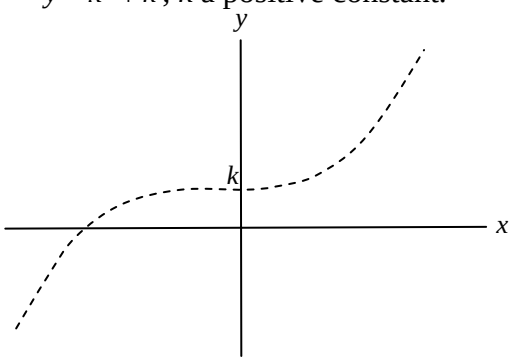

Crosses y-axis at k **A1**
Crosses x-axis (y = 0)
$k = -x^3$, $\therefore x = -\sqrt[3]{k}$ **A1**

b) i) $y = -x^3 - k$ **A1**
ii) $+ 2k$ **A1**

c)

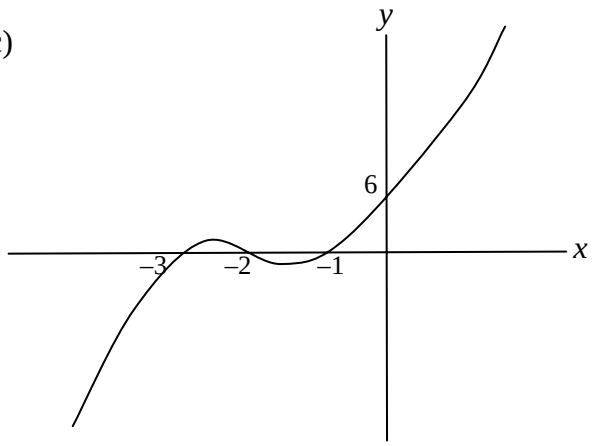

A1 for correct sketch
A1 for correct values **7**

4. a) At x = b **A1**

b) A False **A1** B True **A1** C False **A1** D True **A1** **5**

5. a) Intersection corresponds to solution of $x^2 = 2x + n$, **M1** $x^2 - 2x - n = 0$ **A1**

Look at discriminant **M1** a = 1, b = –2 c = –n

$b^2 - 4ac > 0$ **M1** $n > -1$ **A1**

b) $b^2 - 4ac = 0$ **M1** $n = -1$ **A1**

c) $b^2 - 4ac < 0$ **M1** $n < -1$ **A1** **9**

6. i)

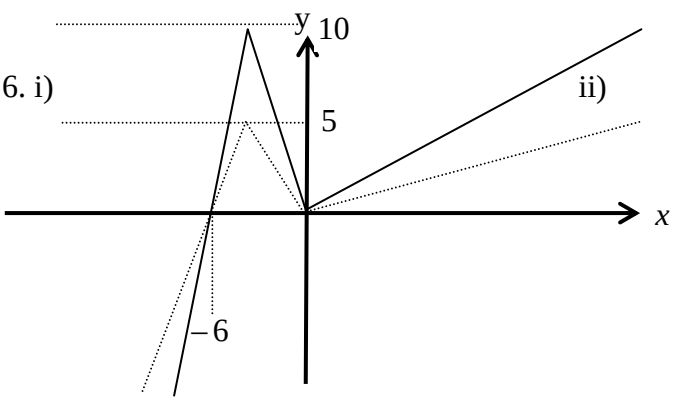

ii)

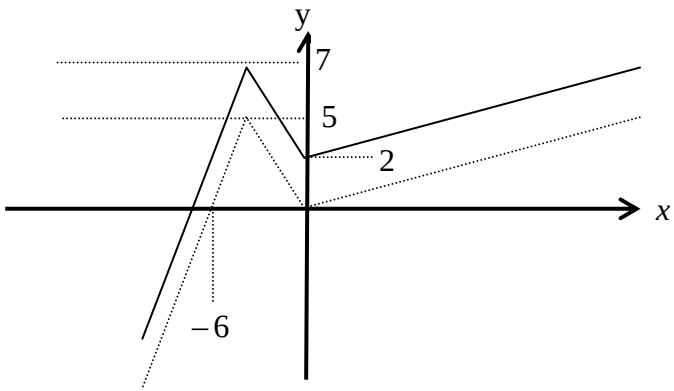

x-axis –6 **A1**

local max 10 **A1**

b) stretch <u>×2</u> (or scale factor 2) in vertical direction **A1**

y-axis 2 **A1**

local max 7 **A1**

shift (or translated) **<u>2 up</u>** **A1**

iii)

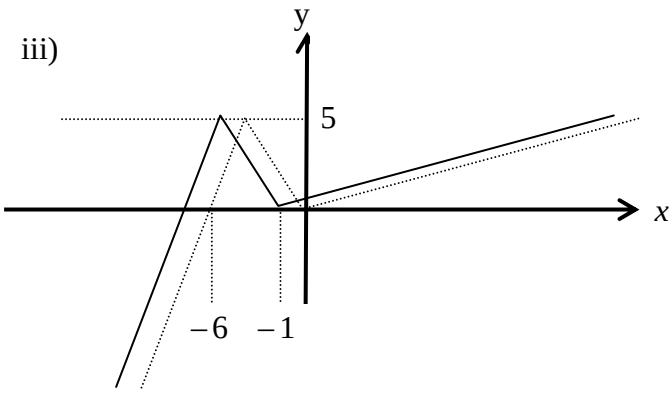

iv)

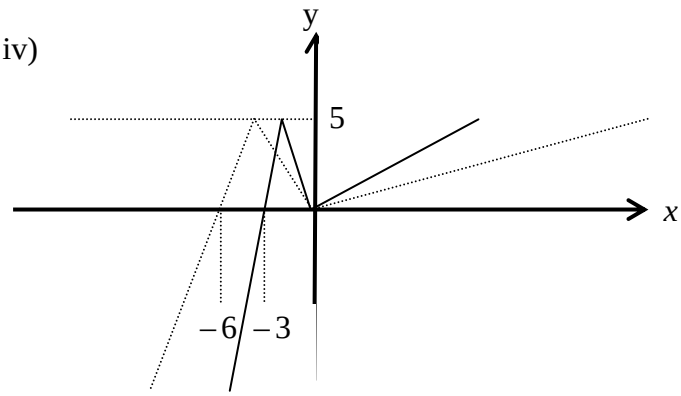

x-axis –1 (and/or –7) **A1**

local max *same height* (5) **A1**

b) shift (or translated) **<u>1 left</u>** **A1**

x-axis –3 **A1**

local max *same height* (5) **A1**

stretch <u>×1/2</u> (or scale factor 1/2) in horizontal dir **A1**

12

{48}